Vitra, with cylinder lock, without forend

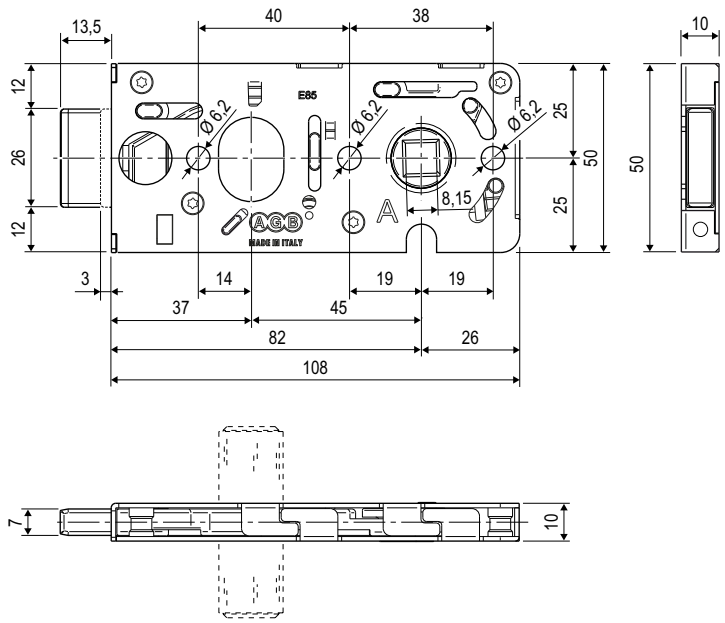

Note. *The latch is resting position comes out of 3 mm.*

Description

Mortice lock with magnetic movement.

Use

For internal doors in glass, aluminium and wood.

Lock fastening

Fasten the lock with the holes for through screws, 6,2 mm diameter.

Cylinder fastening

Use the grub in the lock forend with 3 mm Allen key.

Order Specifications

Material	Article	Backset	
STEEL	B04583.85.XX	82	6 mm

Note. *Refer to the price list in force to check the availability of the finishes.*