Round/square ends with cylinder lock (twin 8 mm hub), 85 mm centre, 22 mm forend

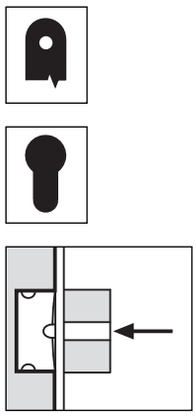

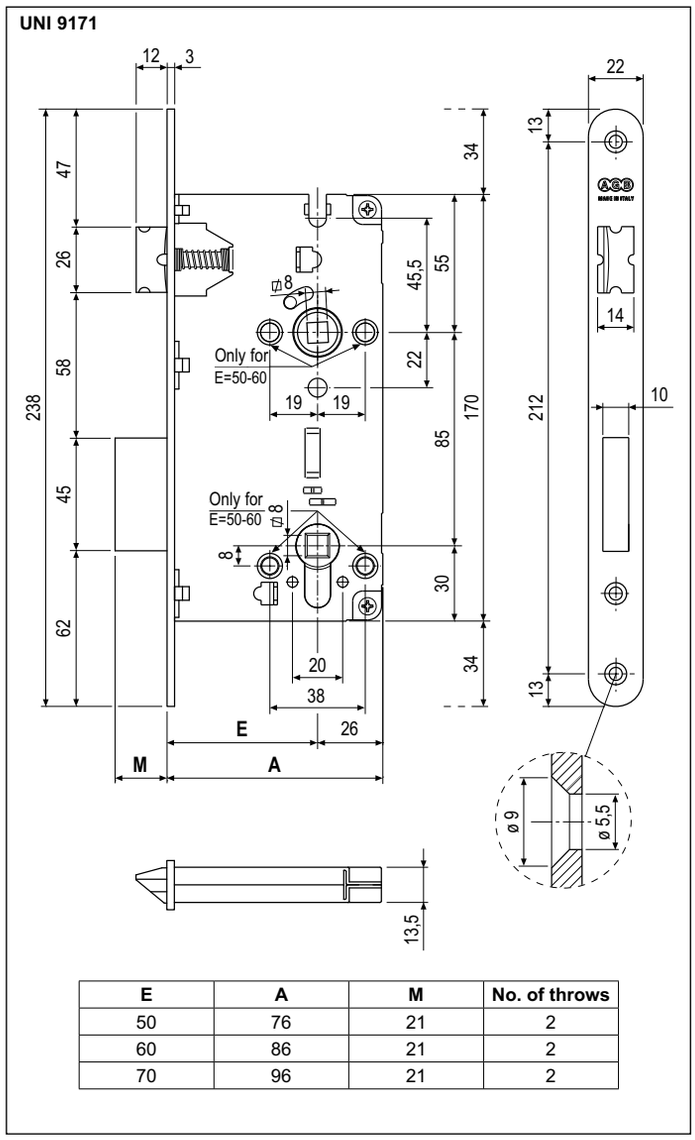

E	A	M	No. of throws
50	76	21	2
60	86	21	2
70	96	21	2

Description

Embedded lock with spring latch and bolt with twin 8 mm hubs also in the cylinder hole; thus it is not necessary to use a DIN V 18254 profile cylinder to move the bolt and the spring latch. 85 mm centre. 22 mm forend with round. 50, 60, 70 mm backsets. Made entirely of steel or with brass forend, spring latch and bolt. Reversible spring latch. Body and forend made of steel or brass.

Application

For interior and main timber doors.

Mounting

Prepare cutout and mill the panel according to the dimensions shown in the diagram. Secure the lock with two 4,5x25 mm screws. To reverse the spring latch, push it out of the forend by pushing with a screwdriver against the screw on the back, then rotate it.

Note. *The striker and cylinder must be ordered separately.*

Order Specifications

Material	SALES CODE			
	Ref.	Backset	Finish	
STEEL	B00876	50-60-70	XX	

Note. *Refer to the price list in force to check the availability of the finishes.*