Scivola Tre square - Kit M - key only 40 mm door thickness with short key

Description

Lock kit without hub, with hook actuated by an articulated short key that folds into the recess of two square brass pulls. All the elements have been designed to eliminate any superfluous projections.

Application

For concealed sliding or folding timber doors with a thickness of 40 mm, on rooms where the door is closed and locked from both sides.

Mounting

The pulls are secured by embedding, aided by silicone. Follow the assembly instructions provided with the kit. Milling cutters art. Z00005.48.01- 48 mm diameter, are available for milling the pull recesses.

Note. *All the kit components come in a single package.*

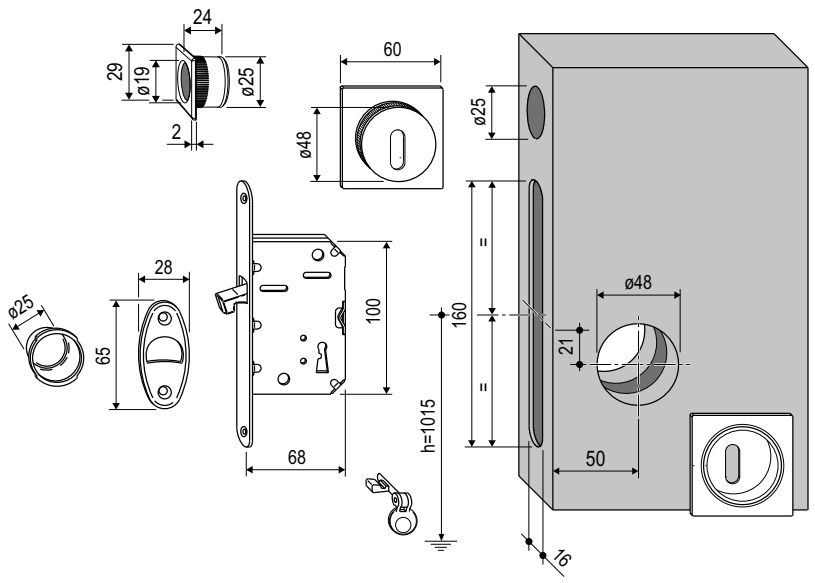

HANDLES ASSEMBLY

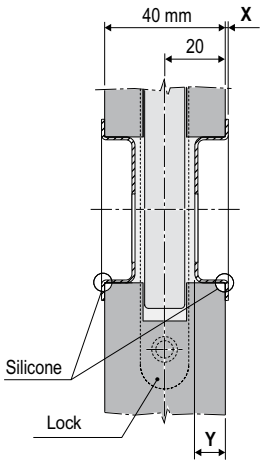

Contents of the kit

1 (*)	1 (**)	1	2	4

(*) Lock with key only.

(**) Kits with key hole can be supplied with reduced neck key (525 version), except the codes already present in the Price List.

Order Specifications

Materiale	Article	X	Y
BRASS	B04963.50.XX	2,5	11
STEEL	B04966.50.XX	1	10

Note. *Refer to the price list in force to check the availability of the finishes.*