Scivola T 18 mm Mediana forend - with hub and key

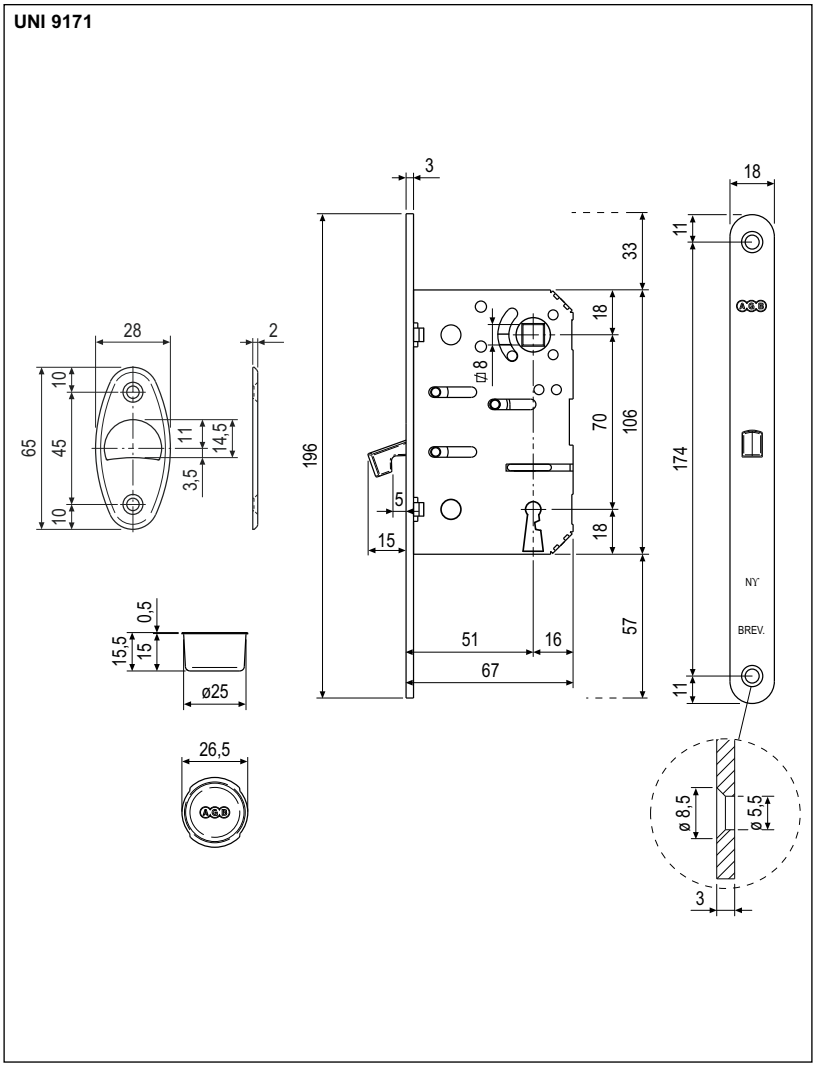

Description

Embedded lock with return claw hook, 18x196 forend with round ends, striker included. Made entirely of steel or with brass forend and striker.

Use

Lock for interior sliding timber doors. The forend dimensions allow to execute the same milling on the door for both Scivola locks and Mediana Evolution, Polaris 2XT and Revolution XT locks.

Fastening

Prepare cutout and mill the panel according to the dimensions shown in the diagram. Secure the lock and striker with four 4x25 mm screws.

Order Specifications

Material	Article	
STEEL	B08902.50.XX	

Note. *Refer to the price list in force to check the availability of the finishes.*

Note. *Already drilled panels for Mediana Evolution, Polaris 2XT and Revolution XT locks, can be drilled again as reported in the drawing to allow the assembly of Scivola lock with Mediana forend coupled with round or oval handles.*

Millings for Mediana and XT

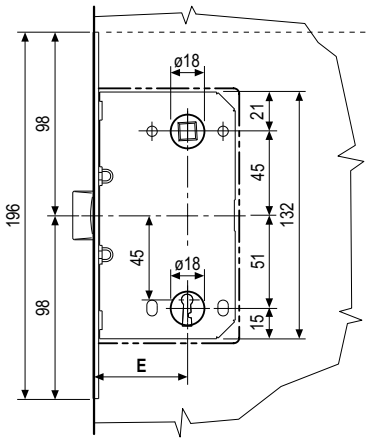

Millings for Scivola T Mediana forend and round handles

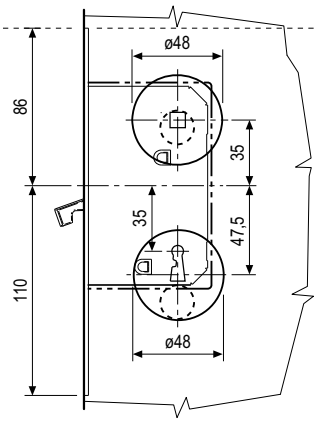
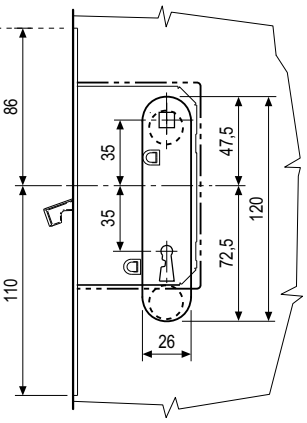
Millings for Scivola T Mediana forend and oval handles