Revolution XT key lock, 90 mm centre, 18 mm forend

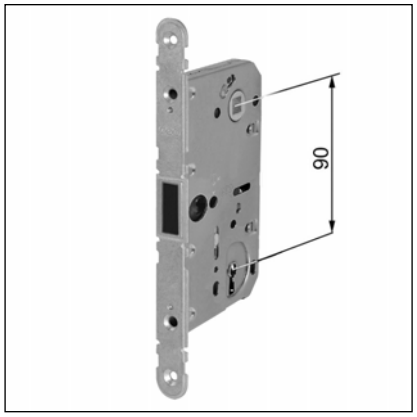

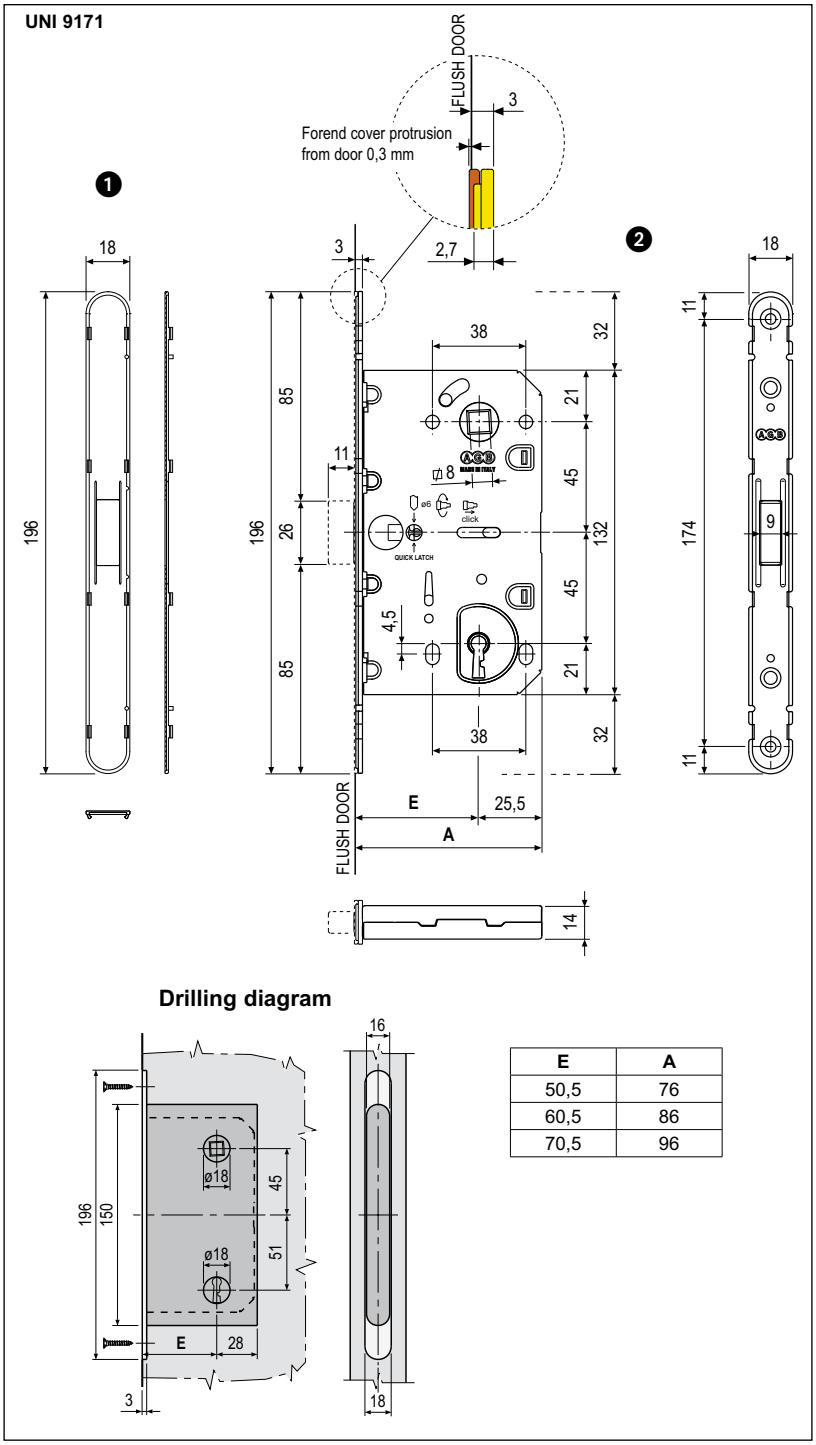

E	A
50,5	76
60,5	86
70,5	96

Description

Magnetic flush-mounted lock with central latch in plastic material.
The key blocks the latch also functioning as bolt but leaving the handle free to go down. Moreover, it let the latch come in.
The lock features no protuberances on the forend, thanks to the latch which is entirely retracted into the casing. Steel front (18 mm) with rounded edge, 50,5, 60,5 and 70,5 mm backset. 90 mm centre.
Perfect interchangeability with Polaris 2XT and Mediana Evolution, allows replacing it in the existing millings. Key lock version with 4 differs available. Steel lockcase with through screw-holes for handle assembly. Latch can be retracted also with key.

Application

The symmetrical, magnetic latch makes the lock right/ left handed.

Mounting

Cut a slot and include a milled component on the panel (dimensions in drawing). Fix the lock with two screws (3,5x20 mm).
The key is provided separately according to selected forend cover.
Note. *Neutral coating of the forend cover (B01120.00.01) can be customized with the same finishing as that of the door. No compatibility problems were found with the coats tested by AGB. AGB always advises customers to check the resistance of the coat before serial forend cover coating.*

Order Specifications - ❶

Article	
B01120.00.XX	

Order Specifications - ❷

Material	Article	
STEEL	B01107.50.01	4
	B01107.60.01	4
	B01107.70.01	4

Note. *Refer to the price list in force to check the availability of the finishes.*