Round ends with key/bathroom lock, 90 mm centre, 22 mm forend

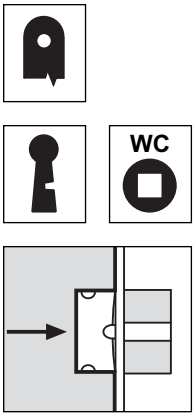

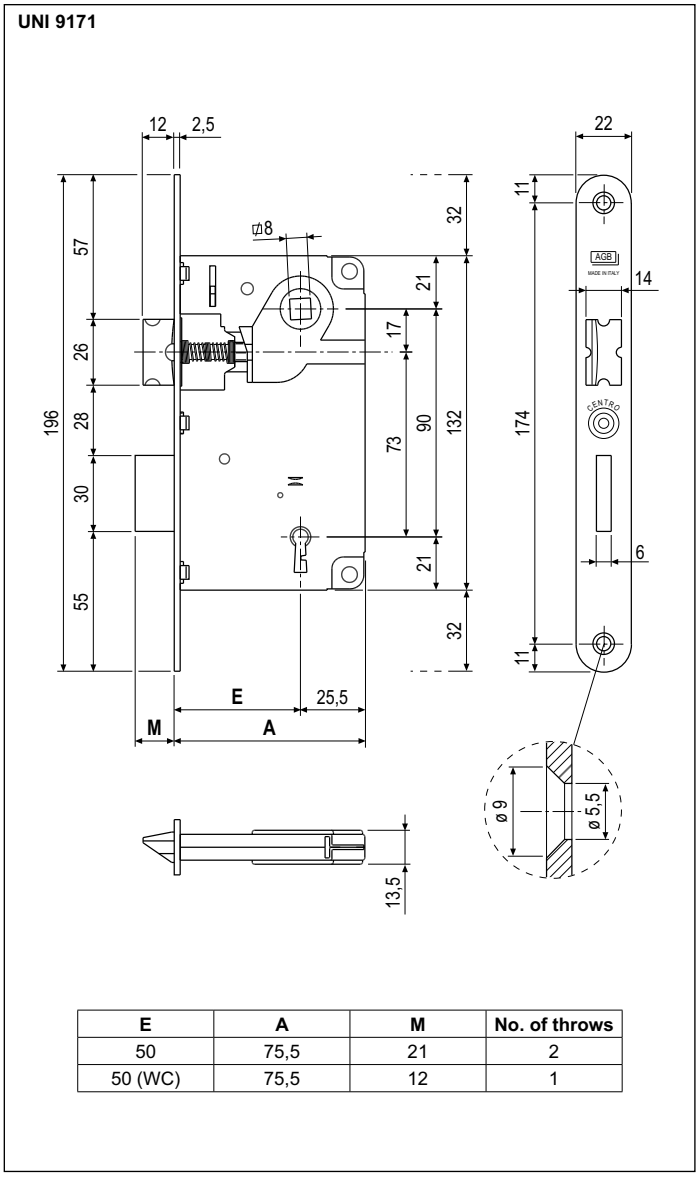

E	A	M	No. of throws
50	75,5	21	2
50 (WC)	75,5	12	1

Description

Embedded lock with spring latch and bolt. 90 mm centre. 22 mm forend with round ends. Single 50 mm backset. Made entirely of steel or with brass forend, spring latch and bolt. Version with key in 4 mixed differs. Bathroom version with 6 mm hub. Reversible spring latch.

Application

For interior timber doors. The position of the hub and key, which are symmetrical with respect to the centre of the panel, allows the reversal of the lockcase in the cutout.
Non-handed doors can thus be obtained for the flush type, which allows you to reduce your stock of panels considerably.

Mounting

Prepare cutout and mill the panel according to the dimensions shown in the diagram. Secure the lock with two 4,5x25 mm screws. To turn the spring latch: lift the locking lever, push the spring latch inside the lockcase and rotate it, then lower the locking lever.

Note. *Each lock comes with a key. Special packagings with only one key differ inside are available on request for industrial applications. The striker, selected according to the construction type, must be ordered separately.*

Order Specifications

Material	SALES CODE			
	Ref.	Backset	Finish code	
STEEL	B01001	50	XX	4

Order Specifications

Material	SALES CODE			
	Ref.	Backset	Finish code	
STEEL	B01005	50	XX	6 mm

Note. *Refer to the price list in force to check the availability of the finishes.*